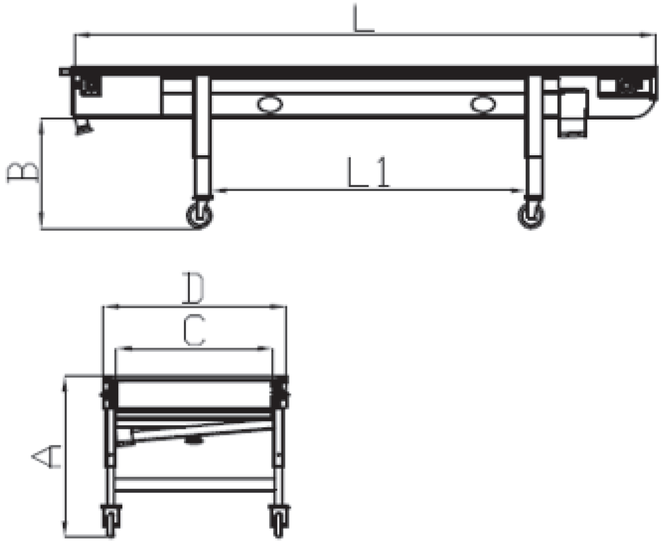

	A (telescopic) mm	B mm	C mm	D mm	L/L1 mm
NS8300	930 +/- 100	665 +/- 100	800	940	3000/1625
NS8400	930 +/- 100	665 +/- 100	800	940	4000/2625